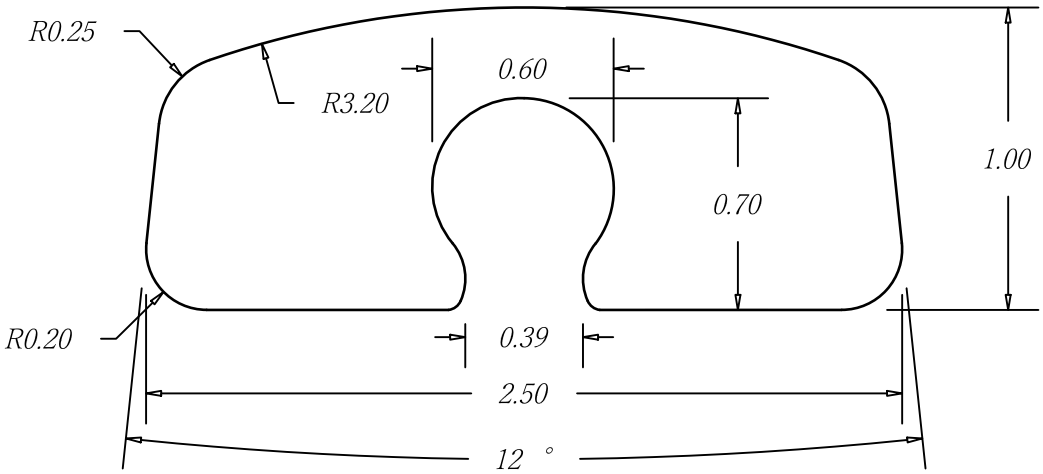
R0.25
R3.20
0.60
1.00
0.70
R0.20
0.39
2.50
12 °